ORIGINAL INSTRUCTIONS

CAUTION: Read the instructions before using this equipment

VANIMAN MANUFACTURING CO.

MASTER PROBLAST 3 ESD

1. CONDITIONS FOR USE

This micro abrasive blaster may only be operated:

- Indoors;
- Below 1981m (6500 ft) above sea level altitude;
- Ambient air temperature between 40°-105°F (5-40°C);
- Maximum relative humidity of 80% at 31°C (88°F);
- Power supply current fluctuations does not exceed 10% of nominal value;
- Under level 2 contamination conditions;
- Supply cool, dry air only, at a maximum pressure of 10.3 Bar (150 PSI).

2. SAFETY

WARNING: Read all safety warnings, instructions, illustrations and specifications provided with this power tool. Failure to follow all instructions listed below may result in electric shock, fire and/or serious injury.

Save all warnings and instructions for future reference.

The term "power tool" in the warnings refers to your mains-operated (corded) power tool or BATTERY-operated (cordless) power tool.

1. Work area safety:

a. **Keep work area clean and well lit.** Cluttered or dark areas invite accidents.

b. **Do not operate power tools in explosive atmospheres, such as in the presence of flammable liquids, gases or dust.** Power tools create sparks which may ignite the dust or fumes.

c. **Keep children and bystanders away while operating this power tool.** Distractions can cause you to lose control.

2. Electrical Safety:

a. **Power tool plugs must match the outlet. Never modify the plug in any way. Do not use any adapter plugs with earthed (grounded) power tools.** Unmodified plugs and matching outlets will reduce risk of electric shock.

b. **Avoid body contact with earthed or grounded surfaces, such as pipes, radiators, ranges and refrigerators.** There is an increased risk of electric shock if your body is earthed or grounded.

c. **Do not expose power tools to rain or wet conditions.** Water entering a power tool will increase the risk of electric shock.

d. **Do not abuse the cord. Never use the cord for carrying, pulling or unplugging the power tool. Keep cord away from heat, oil, sharp edges or moving parts.** Damaged or entangled cords increase the risk of electric shock.

e. **When operating a power tool outdoors, use an extension cord suitable for outdoor use.** Use of a cord suitable for outdoor use reduces the risk of electric shock.

f. I**f operating a power tool in a damp location is unavoidable, use a RESIDUAL CURRENT DEVICE (RCD) protected supply.** Use of an RCD reduces the risk of electric shock.

3. Personal Safety

a. **Stay alert, watch what you are doing and use common sense when operating a power tool. Do not use a power tool while you are tired or under the influence of drugs, alcohol or medication.** A moment of inattention while operating power tools my result in serious personal injury.

b. **Use personal protective equipment. Always wear eye protection.** Protective equipment such as dust mask, non-skid safety shoes, hard hat, or hearing protection used for appropriate conditions will reduce personal injuries.

c. **Prevent unintentional starting. Ensure the switch is in the off-position before connecting to power source and/or BATTERY pack, picking up or carrying the tool.** Carrying power tools with your finger on the switch or energizing power tools that have the switch on invites accidents.

d. **Remove any adjusting key or wrench before turning the power tool on.** A wrench or a key left attached to a rotating part of the power tool may result in personal injury.

e. **Do not overreach. Keep proper footing and balance at all times.** This enables better control of the power tool in unexpected situations.

f. **Dress properly. Do not wear loose clothing or jewelry. Keep your hair, clothing and gloves away from moving parts.** Loose clothes, jewelry or long hair can be caught in moving parts.

g. **If devices are provided for the connection of dust extraction and collection facilities, ensure these are connected and properly used.** Use of dust collection can reduce dust-related hazards.

h. **Do not let familiarity gained from frequent use of this tools allow you to become complacent and ignore tool safety principles.** A careless action can cause severe injury within a fraction of a second.

4. Power tool use and care:

a. **Do not force the power tool. Use the correct power tool for your application.** The correct power tool will do the job better and safer at the rate for which it was designed.

b. **Do not use the power tool if the switch does not turn it on and off.** Any power tool that cannot be controlled with the switch is dangerous and must be repaired.

c. **Disconnect the plug from the power source and/or remove the BATTERY pack, if detachable, from the power tool before making any adjustments, changing accessories, or storing power tools.** Such preventive safety measures reduce the risk of starting the power tool accidentally.

d. **Store idle power tools out of the reach of children and do not allow persons unfamiliar**

with the power tool or these instructions to operate the power tool. Power tools are dangerous in the hands of untrained users.

e. **Use the power tool, accessories and tool bits etc. in accordance with these instructions, taking into account the working conditions and the work to be performed.** Use of the power tool for operations different from those intended could result in a hazardous situation.

f. **Keep handles and grasping surfaces dry, clean and free from oil and grease.** Slippery handles and grasping surfaces do not allow for safe handling and control of the tool in unexpected situations.

5. Service

a. **Have your power tool serviced by a qualified repair person using only identical replacement parts.** This will ensure that the safety of the power tool is maintained.

3. SPECIAL ATTENTION TO THIS PRODUCT

- Unplug equipment from the wall before changing out the LED light. Do not squeeze or bend the light tube. Always wear gloves or use a towel to protect your hands from glass splinters.
- Always disconnect the unit from the compressed air and power sources before beginning any maintenance.
- Any abrasive material on the O-ring may lead to leakage and early wear of the O-ring. After filling, clean the thread and O-ring before applying the lid.
- Solvents will create cracks in the jar and weaken the jar (danger of explosion!). Clean the lid and tank only with a dry cloth. Do not write or adhere anything to the jar or lid.
- Check for damages on the lids and tanks regularly and replace them if there is any doubt of the structural integrity.
- Before operation, check to make certain the lid is secured properly. Using the product without the lid secured will create a serious explosive hazard.
- Never operate the blasting units without suitable dust extraction and appropriate protective gear. The type of dust extraction should be based on the type dust generated. Ask the proper authorities.
- Never direct the blasting material towards eyes or unprotected areas of skin. Improper use can result in risk of eye or skin injuries.
- Never work with the glass door open.
- Do not depress the foot switch when only the compressed air supply hose is connected. The loose hose could wrap around itself and cause serious injury.
- Maintain equipment and accessories. Check for breakage of parts and any other condition that may affect the equipment’s operation.

- The triangular light symbol labelled on the light indicates that the user should not look directly into the light and that doing so may cause eye damage.

- Please note that correct use requires reference to this manual and that the following label indicates that the user should reference this manual prior to operation.

4. LIABILITY EXCLUSION

Vaniman Manufacturing shall be absolved from all claims for damages and warranty if:

- The product is used for any purpose other than it was designed for.
- The product is altered in any way other than those described in the operating instructions.
- The product is repaired by anybody other than an authorized facility or if any parts other than Vaniman OEM parts are used.
- The product continues to be employed, despite obvious safety faults.

PACKING LIST

1 - Master Problast 3 ESD
1 - Instructions
1 - LED DC Power Supply
1 - Ionizer DC Power Supply

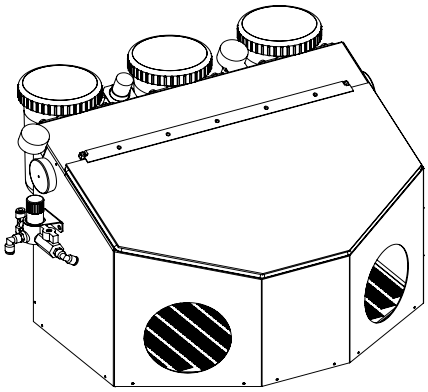

INSTALLATION & OPERATION

1. Remove all packing material.
2. Unscrew lids on abrasive storage tanks.
3. Fill media storage tanks to fill line with blasting media in the micron size specified on tank label. **DO NOT OVERFILL** - clogging may result.
4. Inspect lid for any cracks or areas that might create leaks. Wipe off excess abrasive and screw lid securely back into place. Do not overtighten.
5. Attach your 1/4" ID (outside diameter) hose air supply line to the quick disconnect on the back of the unit. If you do not have the proper hose for the quick disconnect on the unit, a barb fitting is provided. To use the barb fitting, remove the quick disconnect fitting with a wrench and replace with the barb fitting. **NEVER depressurize the system by disconnecting the air supply line while under pressure.** Abrasive will be forced into the foot valve and regulator, causing damage.

   For more help visit: www.vaniman.com/air-supply-connections-blasters/

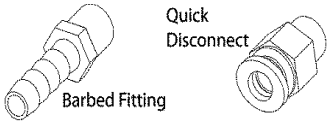

6. Inside the Problast is the “TANK” selector knob for using each of the tanks. For ease of use the handpieces, tanks, and valves are all color-coded. Select the tank of choice making sure this knob is dialed all the way to the appropriate position. The downward position will shut off air pressure to the tanks. (This “off” position should be used when filling the abrasive storage tanks.)
7. Regulate air pressure by turning the air regulator knob. Unlock by pulling up the knob then turn. Pressure reading will indicate pressure. **DO NOT adjust above 100 psi (7 BARS).**
8. Connect the Ionizer power supply to an electrical outlet. The LED indicators will illuminate once power is applied. See page 10 for additional instructions on ESD set up.
9. To engage the ESD air flow, turn the valve on the rear of the unit for the ESD air supply. Any time full ESD protection is required, this valve must be on. The gauge should read roughly 30 psi before depressing foot pedal and can be changed by removing the tamper-resistant knob. This can be adjusted to increase flow by removing the snap-ring on the regulator knob, adjusting, and replacing the snap ring.

10. To begin blasting, use the foot pedal to start the flow of air and blasting media. Release the foot pedal to stop the flow.
11. A dust collector is strongly recommended to contain the dust inside the cabinet:

-120V Abrasive-Vac Dust Collector **P/N 10660**
-220V Abrasive-Vac Dust Collector **P/N 10664**

LIGHTING OPERATION

1. The Problast Titan is equipped with a lighting assembly that includes both standard LED illumination and 355nm UV lighting.
2. Connect provided power supply to an electrical outlet, then connect the other end to the power port located below the light switch.
3. The light switch is located on the right side of the cabinet near the top.
4. Use the 4-position switch to select your desired lighting mode:
   - **Position 1:** LED light only
   - **Position 2:** UV light only
   - **Position 3:** Both LED and UV lights
   - **Position 4:** Off
5. The UV light can be used to help highlight coatings or materials that fluoresce under UV illumination. Select lighting as needed for best visibility during operation.

MAINTENANCE

Vaniman blasters are designed to be low maintenance. However, as the materials used in a microblaster are abrasive by design, components do wear out. A few minor areas should be maintained regularly for a long product life.

Handpiece Hoses:

Check handpiece hoses for wear regularly. When hose feels thin or holes develop, the tubing should be replaced.

On the rear of IO/Master units, there is a pinch valve that controls the flow of media by squeezing and releasing the handpiece tube. This will be the point of highest wear on the tubing and therefore the hose should be moved periodically in order to wear a new section of hose. If a hole develops, replace the tubing.

Handpiece Tip Installation:

It is imperative that the handpiece tip and sealing O-ring be installed correctly and securely to avoid damage or leaks. Install in the manner shown in Illustration 1 and ensure the tip and O-ring sit evenly in the assembly.

Tanks:

When installing the lids on the tanks, be sure the lid is rid of any blasting material or debris. If the tank or lid begins to wear, replace immediately. Do not over-tighten the lid on the unit. The fittings on the bottom of the tank are designed for easy maintenance of the hoses. To

remove a handpiece tubing from quick disconnect fitting, push toward the tank on the plastic ring while pulling the tubing out. Do not remove the hose fittings while tank is full of media and upright; turn the tank upside down or empty before removing hoses. To replace, be sure the fitting and hose are free of debris or abrasives and push the hose firmly into the fitting. Be sure the tube reaches beyond the black O-ring that is just above the quick disconnect fitting in the tank. Improper installation will result in leakage and damage to the tanks.

Glass Window:

Included with the unit is a free "Static-Cling" blasting shield for the inside of the window. These are inexpensive protection for the viewing clarity of the window. To install, pull off the backing on the shield and adhere to the inside of the window. Replace when necessary.

Moisture:

Vaniman blaster regulators include a filter for small amounts of oil and moisture. If moisture causes the media to clump or cake in the tanks, improper media flow will result. Be sure the air supply is relatively oil and moisture free. Installation of a heavy duty air filter/dryer between the air supply and unit may be required.

Part No.	Nozzle Size, Inches (mm)	Color	Recommended Media
Long Lasting Crystal Tips (2 per package)			
97902	Medium, .032” (.8mm)	Blue	25/50 µm Al_2O_3
97903	Large, .048” (1.2mm)	Black	50/100 µm Al_2O_3, 50 µm Glass
97904	Extra Large, .065” (1.6mm)	Red	100-250 µm Al_2O_3, 50/100 µm Glass
Precision Tungsten Carbide Tips (1 per package)			
97905	Small, .026” (.65mm)	Yellow	25 µm Al_2O_3
97906	Medium, .036”(.91mm)	Green	50/100 µm Al_2O_3, 50 µm Glass
97907	Large, .059” (1.5mm)	Violet	100-250 µm Al_2O_3, 50/100 µm Glass

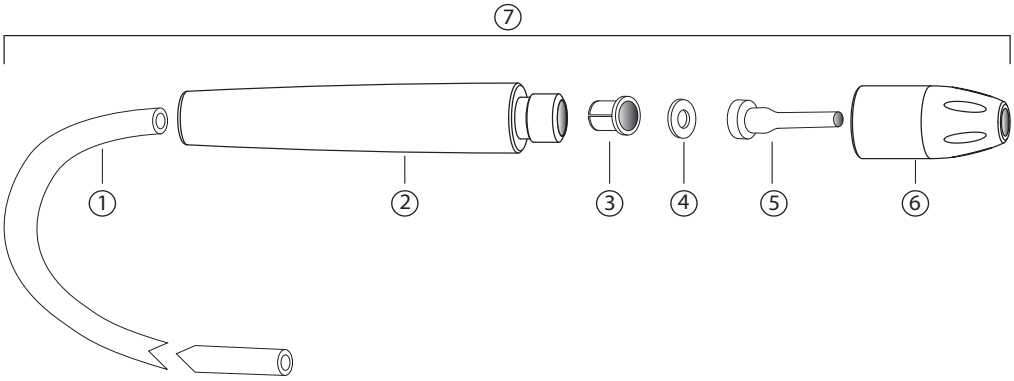

Illustration 1

Fig.	Reorder #
1	2192
2	2191
3	2187
4	2188
5	Varies, #4 Included
6	2177
7	97959, #4 & #5 Not Included

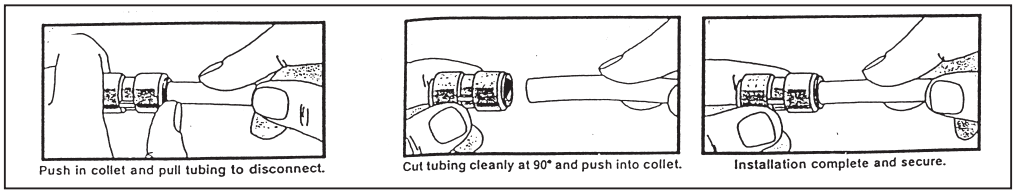

HANDPIECE PARTS

Number	Description	Part Number	Corresponding unit
1	Anti-Static Handpiece Tubing	97928 (2ft.) 97929 (3ft.) 97930 (4ft.) 97999 (6ft.) 2192 (by the foot)	SandStorm Edge, Professional, 2, Expert, & Problast 2 SandStorm XL & Problast SandStorm Prestige & Problast 3 Problast Titan, Sandstorm Mobile & Mobile Problast -
2	Handle	2191	All Units
3	Handpiece Insert	2187	All Units
4	O-Ring	97909 (5-pack)	All Units
5	Tip (o-ring included)	See Below	All Units
6	Nozzle Cap	2177	All Units
7	2ft. Handpiece Assembly* 3ft. Handpiece Assembly* 4ft. Handpiece Assembly* 6ft. Handpiece Assembly*	97947 97949 97959 98109	SandStorm Edge, Professional, 2, Expert, & Problast 2 SandStorm XL & Problast SandStorm Prestige & Problast 3 Problast Titan, SandStorm Mobile & Mobile Problast

*Does not include o-ring or tip

BLASTER TIPS

Tip Type	Part No.	Color	Nozzle Size	Recommended Vaniman Media	Recommended Tank Assembly	
					Part Number	Description
Crystal Tip (2 per pack)	97902	Blue	Medium 0.032" (0.8mm)	25µm Al2O3	97956	25µm
				50µm Al2O3	97957	50-100µm
	97903	Black	Large 0.048" (1.2mm)	50µm Glass Bead		
				100µm Al2O3		
	97904	Red	Extra Large 0.065" (1.6mm)	50µm Glass Bead		
				100µm Al2O3		
				250µm	97958	110-250µm
Tungsten Carbide Tip (1 per pack)	97905	Yellow	Small 0.026" (0.65mm)	25µm Al2O3	97956	25µm
	97906	Green	Medium 0.036" (0.91mm)	50µm Al2O3	97957	50-100µm
				50µm Glass Bead		
				100µm Al2O3		
	97907	Violet	Large 0.059" (1.5mm)	80/100 VanAcrylic	98212	VanAcrylic Tank Configuration
				50µm Glass Bead	97958	110-250µm
				100µm Al2O3		
				250µm Al2O3		

BLASTER MEDIA HTTPS://WWW.VANIMAN.COM/MEDIA-SELECTOR/

Material	Size	Part Number			Applications
		55lbs.	15lbs.	One Tank	
Aluminum Oxide	25µm	98201	97921	97935	Fine surfacing of metal and other hard materials.
	50µm	97927	97922	97936	Deburring and deflashing of metals and other hard materials.
	100µm	98202	97923	97937	Aggressive removal of materials, semi-rough finished surface.
	250µm	98203	97924	97938	Bulk removal or surface cleaning of tough materials. Rough surface preparation.
Glass Bead	50µm	98204 (50 lbs)	97925	97939	Smoothing/polishing. Cleans and polishes without removing material.
Sodium Bicarbonate	50-100µm	98206 (50 lbs.)	97934	98200	Aggressive removal of materials, water soluble and does not embed into the material.
Walnut Shell	200 Grit	-	97933	-	Organic, used for cleaning purposes.
	40/100 Grit	98207 (50 lbs.)	97932	-	
	20/40 Grit	97931 (50 lbs.)	-	-	
VanAcrylic Media	80/100 Grit	98210 (30 lbs.)	98209 (5 lbs.)	98208	Conformal coating removal, delicate paint removal.

* For 80/100 VanAcrylic Media, use Tank Configuration PN 98212 for optimal performance. For 60/80 VanAcrylic media inquire with Vaniman.
* 40/100 or 20/40 Walnut Shell, use only in siphon-style sandblasters. Inquire with Vaniman for detailed information.

REPLACEMENT PARTS

Blasting Media

Part No.	*Material*	*Size*	*Applications*
97921	Aluminum Oxide	25µm	Fine surfacing of metal or hard materials.
97922	Aluminum Oxide	50µm	Deburring and deflashing of metals and other hard materials.
97923	Aluminum Oxide	100µm	Aggressive removal of materials, semi-rough finished surface.
97924	Aluminum Oxide	250µm	Bulk removal or surface cleaning of tough materials. Rough surface preparation.
97925	Glass Bead	50µm	Smoothing/polishing. Cleans and polishes without removing material.

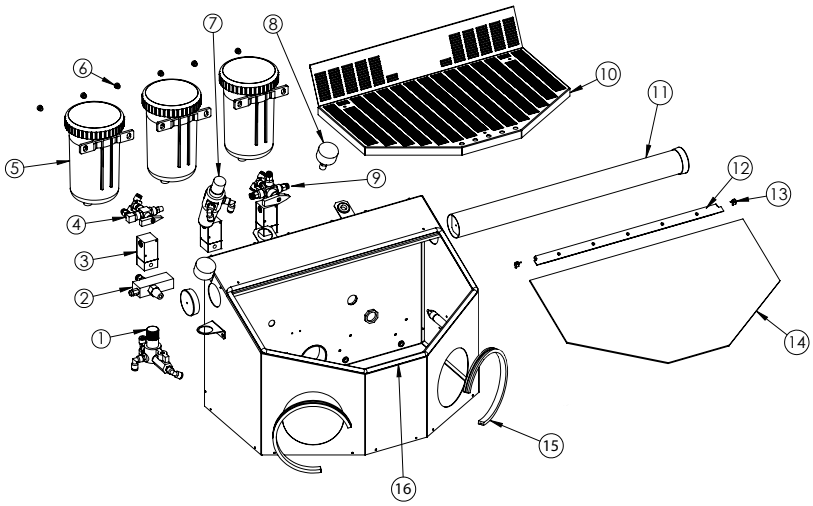

Fig. #	***Description***	***Reorder Part Number***
1	ESD Regulator	2227
2	ESD Ionizer	3490
3	Pinch Valve	2234
4	Vent Valve Assembly	2283
5	Sand Jar Assembly 25 micron Sand Jar Assembly 50-100 micron Sand Jar Assembly 110-250 micron Sand Jar Assembly VanAcrylic	97956 97957 97958 98212
6	Thumb Nut	2266
7	Regulator	2286
8	Air Pressure Gauge	2112
9	Selector Valve Assembly	2284
10	Floor Screen	2240
11	LED Light Assembly (if no UV lighting is required)	97969
11	UV LED Light Assembly	97997
12	Window Bracket Assembly (with glass)	2282
13	Pin-Hinge Assembly	2290
14	Window Only	2241
15	Cuff Holder	2260
16	Window Gasket Kit	2030B
Not Shown	Cuff (black cloth)	2033XL
Not Shown	Blow Off Gun	2285
Not Shown	Window Protector Shield	97951

PLUMBING

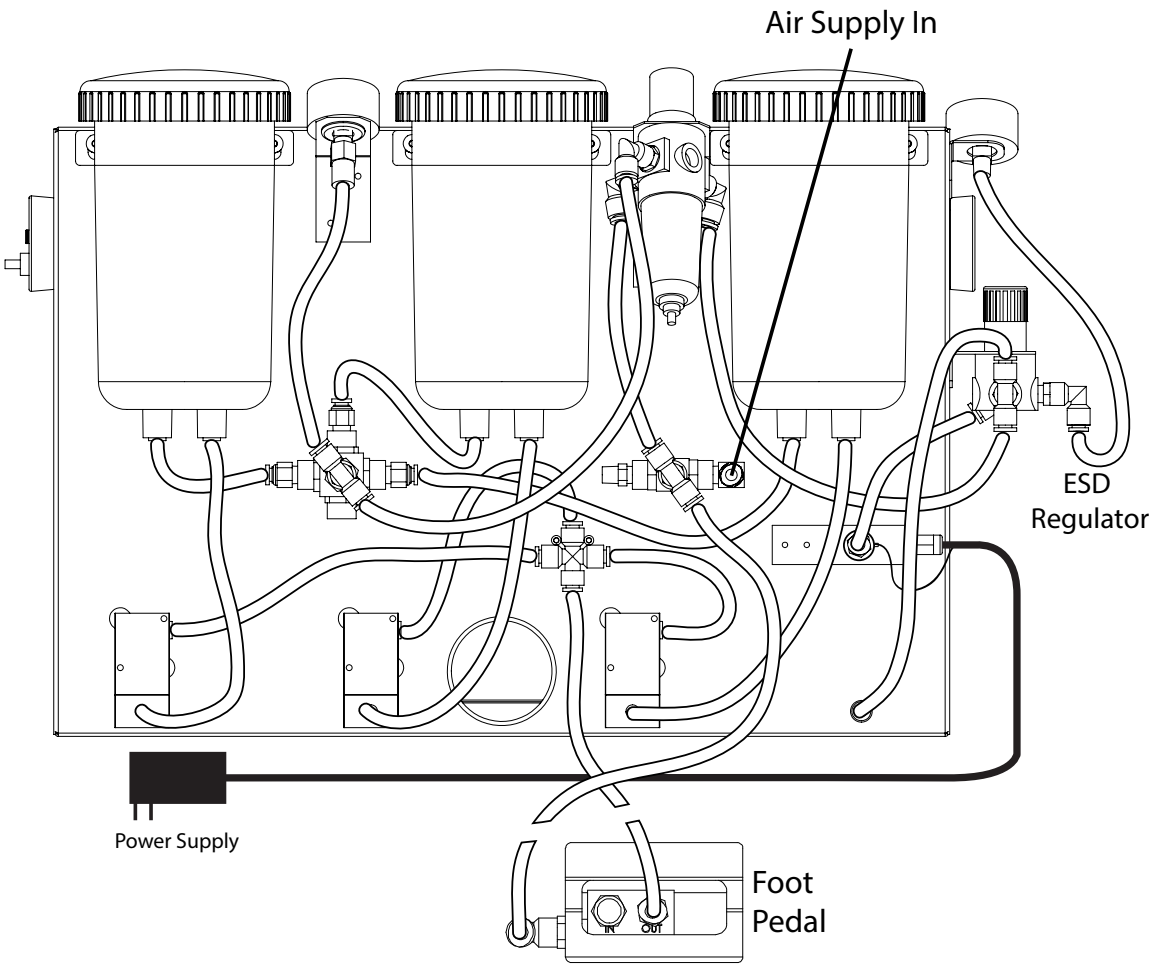

PROPER GROUNDING PROCEDURE

When setting up your Vaniman ESD Blaster, it is important to correctly ground your system to provide the best possible protection against ESD damage to the parts you are blasting. To properly ground your system, complete the following steps:

1. Using a typical wall outlet, unscrew the middle screw that holds the outlet faceplate to the outlet body (Fig. 1), but keep the outlet faceplate in place on the outlet once the screw is removed.
2. Plug the Ionizer power supply into the provided gray outlet adapter, then plug both into one of the wall outlets so that the adapter's metal tab with a hole in it aligns with the outlet's faceplate mounting hole (Fig. 2).
3. Take the green wire attached to the Ionizer power supply wiring harness with the ring terminal on the end and slide the ring terminal between the metal tab of the gray adapter and the outlet faceplate, with the holes aligned.
4. Secure the adapter and power supply to the outlet faceplate using the same screw removed in step 1 above. Your ESD system will now be properly grounded.
5. If you are not in the US, ensure proper grounding in accordance with your local electrical regulations and safety standards.

Fig. 1

Fig. 2